Centre Number	Candidate Number	Name

UNIVERSITY OF CAMBRIDGE INTERNATIONAL EXAMINATIONS
General Certificate of Education
Advanced Subsidiary Level and Advanced Level

PHYSICS **9702/03**

Paper 3 Practical Test

May/June 2006

1 hour 15 minutes

Candidates answer on the Question Paper.
Additional Materials: As listed in the Confidential Instructions.

READ THESE INSTRUCTIONS FIRST

Write your Centre number, candidate number and name on all the work you hand in.
Write in dark blue or black pen in the spaces provided on the Question Paper.
You may use a soft pencil for any diagrams, graphs or rough working.
Do not use staples, paper clips, highlighters, glue or correction fluid.

Answer the **one** question.

You are expected to record all your observations as soon as these observations are made, and to plan the presentation of the records so that it is not necessary to make a fair copy of them. The working of the answers is to be handed in.
Marks are mainly given for a clear record of the observations actually made, for their suitability and accuracy, and for the use made of them.
Additional answer paper and graph paper should be submitted only if it becomes necessary to do so.
You are reminded of the need for good English and clear presentation in your answers.

At the end of the examination, fasten all your work securely together.

For Examiner's Use

This document consists of **10** printed pages, **2** blank pages and an insert.

© UCLES 2006

You may not need to use all of the materials provided.

1 In this question you will investigate the stability of a container of water as the height of water in the container is changed.

(a) (i) A sheet of paper with a scale on it has been inserted in this Question Paper. Cut the sheet of paper along the dotted lines as shown in Fig. 1.1.

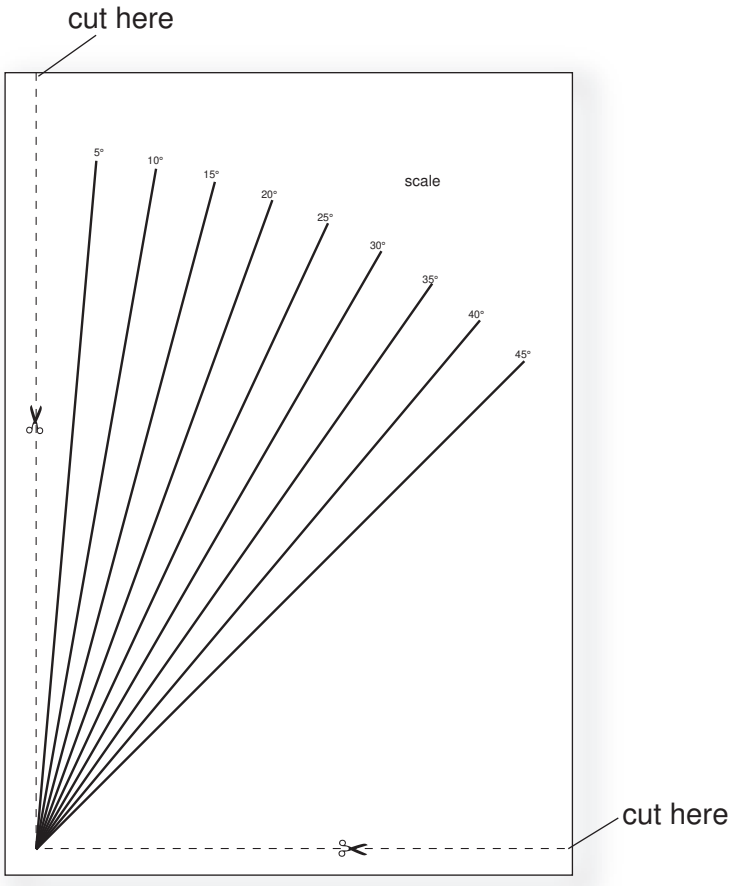

Fig. 1.1

© UCLES 2006

(ii) You are provided with two sheets of card attached to each other. Use the paper clips to attach the scale to the card, as shown in Fig. 1.2.

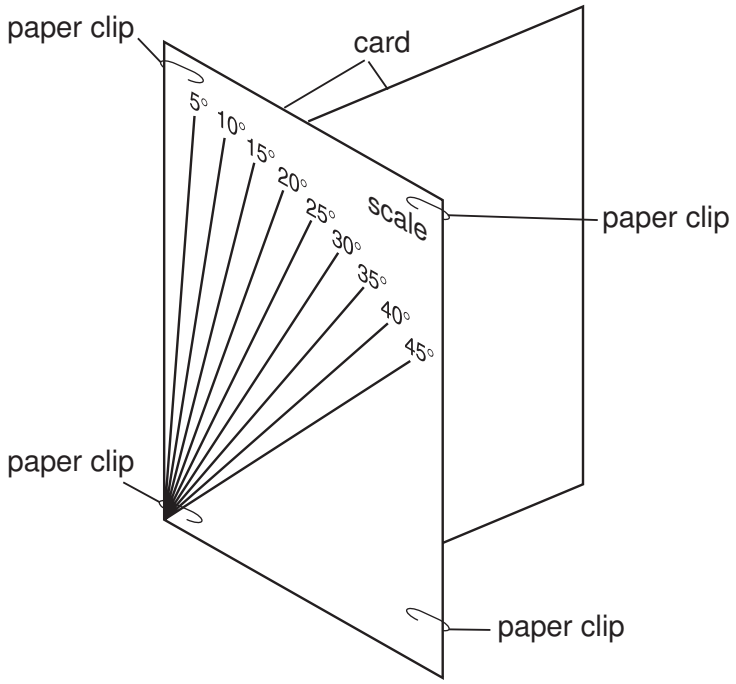

Fig. 1.2

(b) (i) You are provided with a plastic bottle that has a 30 cm rule fixed to one side. You should **not** remove this rule from the bottle during the experiment. Place the bottle so that the bottom of the rule is just touching the card that has been taped to the bench. The arrangement is shown in Fig. 1.3.

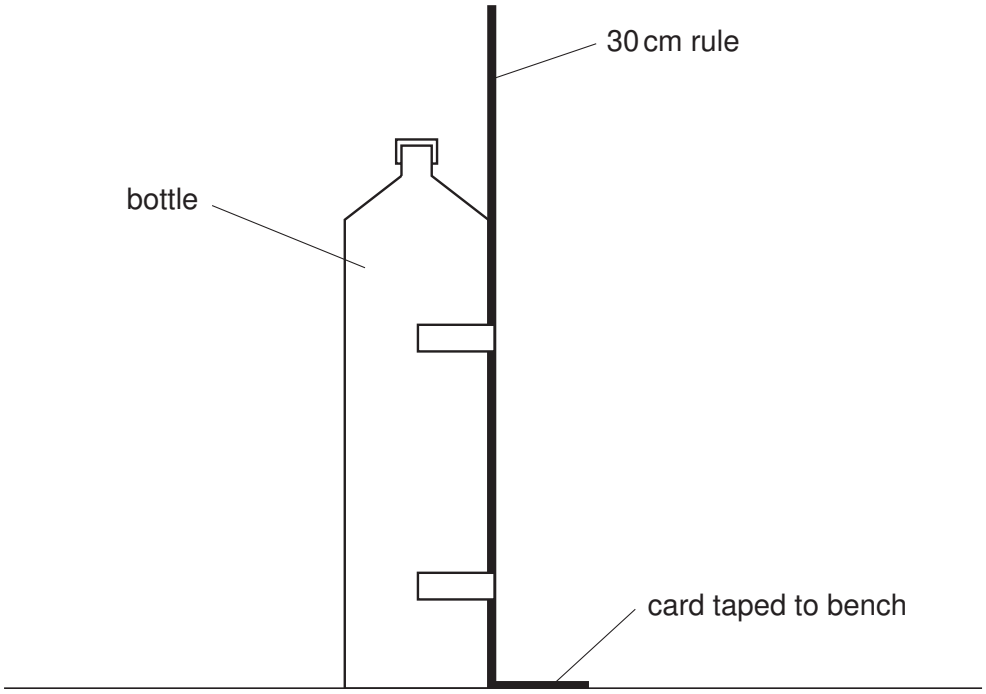

Fig. 1.3

© UCLES 2006

(ii) Place the scale behind the bottle so that the left-hand edge of the scale is aligned with the rule. Place some paper towels below the scale. The arrangement should now be as shown in Fig. 1.4.

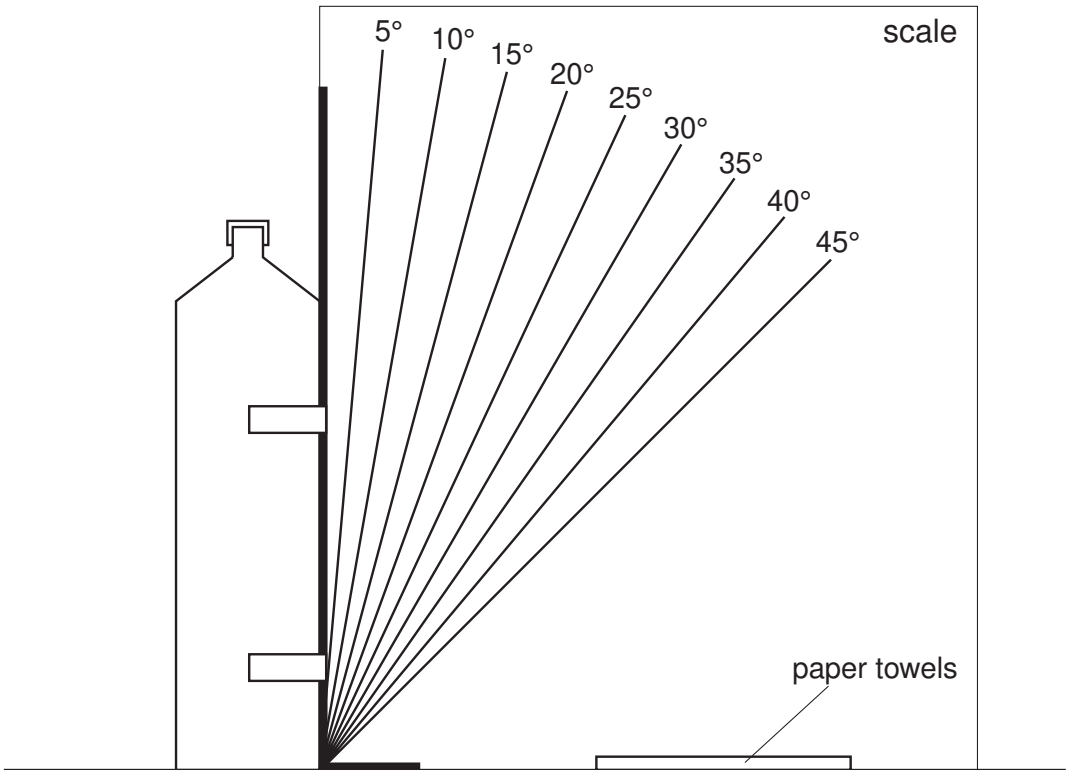

Fig. 1.4

(c) (i) Gently push the top of the bottle in the direction shown in Fig. 1.5 so that the bottle begins to tilt.

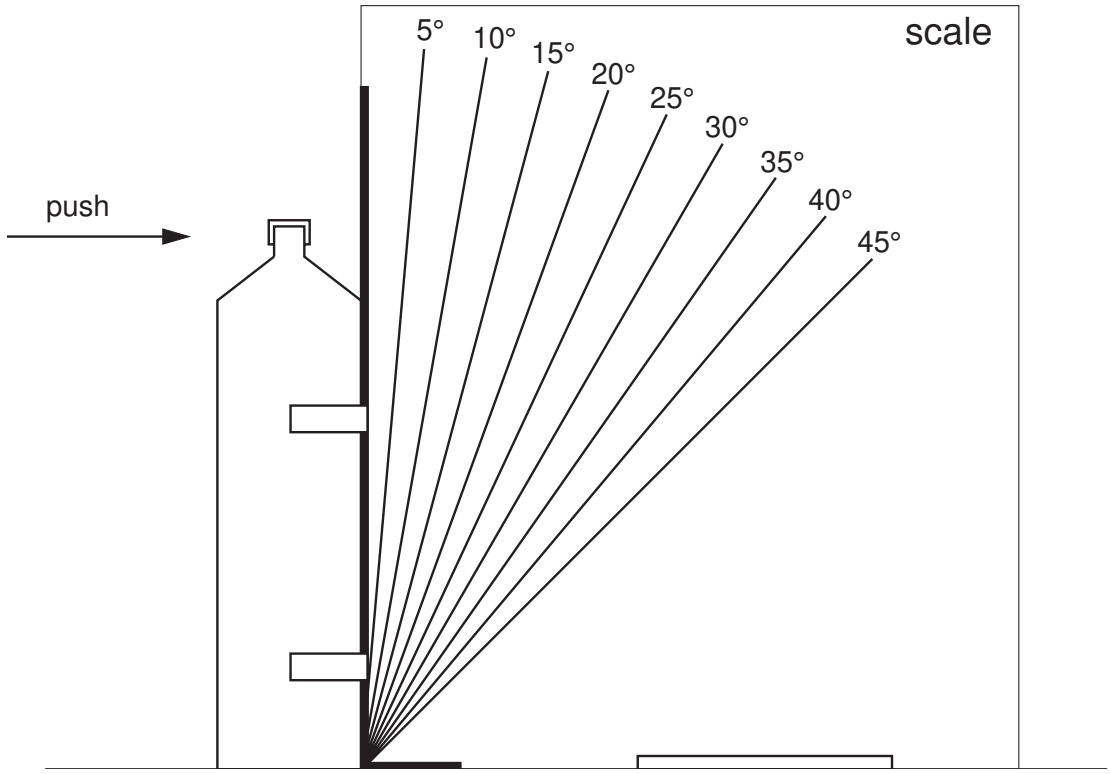

Fig. 1.5

Continue pushing until the bottle falls over. Measure and record the angle θ at which the bottle just falls over onto the paper towels.

θ = ...

(ii) Remove the cap from the bottle. Add a small amount of water to the bottle using the funnel so that the initial depth d of water in the bottle is about 1 cm. Replace the cap so that the water does not leak out when the bottle falls.

(iii) Repeat **(c) (i)**, recording your values of d and θ below.

d = ...

θ = ...

© UCLES 2006

(iv) Determine the percentage uncertainty in the value of d.

percentage uncertainty in d = ……

(v) State one source of error in the measurement of d.

.....

.....

(vi) State one source of error in the measurement of θ.

.....

.....

© UCLES 2006

(d) Change the level of the water in the bottle and repeat **(c) (i)** until you have nine sets of values for d and θ. Values of d should be in the range from zero to about 15 cm.

(e) Plot a graph of θ (y-axis) against d (x-axis) and draw a smooth curve through the points.

(f) Use your graph to find the value of d for which θ is a maximum.

d = ...

© UCLES 2006

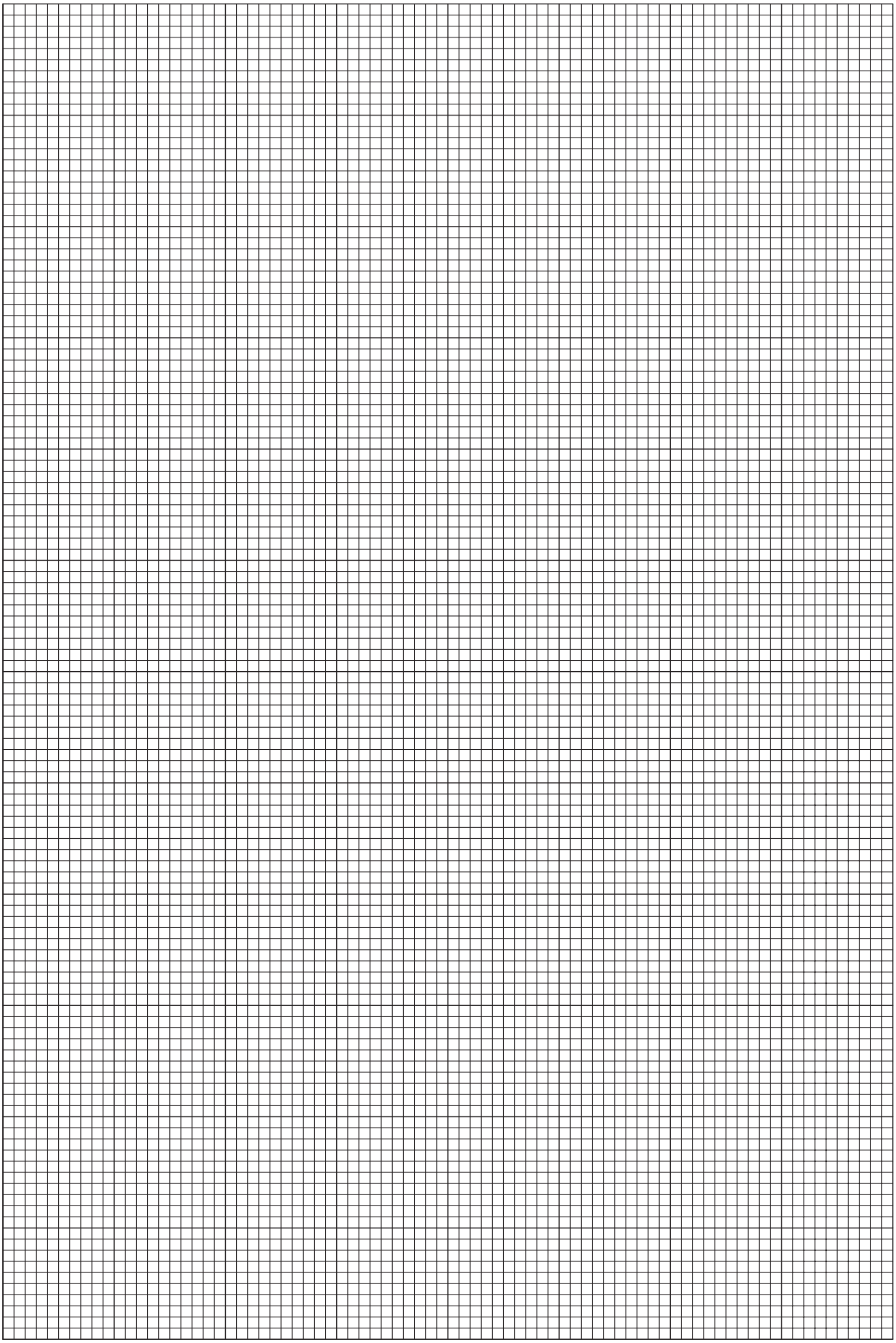

(g) Suppose that the experiment were to be repeated with a bottle that has a base diameter twice that of the original, but of the same height. On the graph paper, draw a curve of the results that you might expect to obtain with this second bottle. Label this second curve C.

(h) It is difficult to obtain reliable results in this experiment. Suggest two ways in which the experiment might be improved.

1. .....

.....

.....

2. .....

.....

.....

© UCLES 2006

BLANK PAGE

BLANK PAGE

Permission to reproduce items where third-party owned material protected by copyright is included has been sought and cleared where possible. Every reasonable effort has been made by the publisher (UCLES) to trace copyright holders, but if any items requiring clearance have unwittingly been included, the publisher will be pleased to make amends at the earliest possible opportunity.

University of Cambridge International Examinations is part of the University of Cambridge Local Examinations Syndicate (UCLES), which is itself a department of the University of Cambridge.